NEWFOUNDLAND AND LABRADOR CURLING ASSOCIATION

JACKET SIZING FORM

Part 1: To be completed by the winning team at the conclusion of the tournament

Event: _____

The NLCA will cover the cost of jackets for **four (4) players** in all events except U16 plus a coach in junior events. Short sleeve shirts, if desired, will be at the expense of the team, but ordered through the NLCA at the time of jacket orders.

It is very important that you CLEARLY PRINT the following required information.

Team Position	Player Name in UPPER CASE (As you want it to appear on the apparel)	Jacket Size	Shirt Size (see above)	First Name on Shoulder?
Skip		M / F _____	M / F _____	Y / N
Third		M / F _____	M / F _____	Y / N
Second		M / F _____	M / F _____	Y / N
Lead		M / F _____	M / F _____	Y / N
Fifth		M / F _____	M / F _____	Y / N
Coach		M / F _____	M / F _____	Y / N

Cresting includes the following items sublimated onto each article:

- Jackets: NLCA crest and last name on back, heart crest on front lapel, and first name on shoulder (if requested)
- Short sleeve shirts (if ordered): The letters "NL" and last name on back

Please describe any additional cresting you wish to be included on your jacket and/or short sleeve shirt and the location where you want them included. Any items that are not sublimated at the same time as the above cresting will be at additional cost.

Player's Name	Crest(s) Provided	Crest Location

Within 24 hours of tournament completion, the winning team must email the form with Part 1 completed to the NLCA Tournament Coordinator (tournaments@curlingnl.ca). Any delays may affect clothing apparel availability!

Part 2: To be completed by the NLCA Tournament Coordinator

Last names above logo on back: Sublimated / Embroider / None Minimum lettering height: ____"

Crest on back & logos: Sublimated / Embroider / Stitch-on / None

Hearts on left chest: Sublimated / Embroider / Stitch-on / None

Additional notes: _____

Supplier to submit a proof of jackets to tournaments@curlingnl.ca for approval prior to adding names and crests.

CANADA SPORTSWEAR - SIZE SPECIFICATIONS

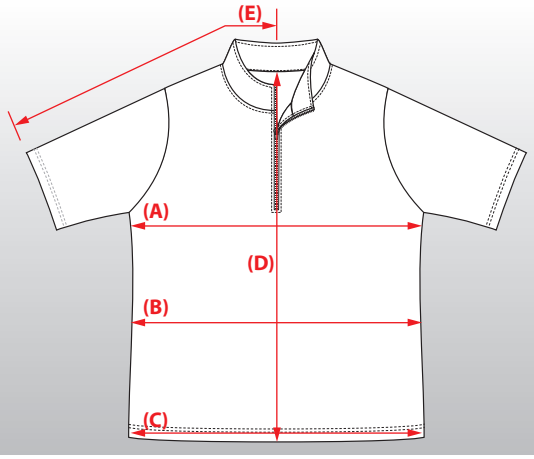

STYLE ST167

SIZE SPECIFICATIONS	XS	S	M	L	XL	2XL	3XL	4XL
Chest Circle **(A)** (1″ below armhole)	36″	39″	42″	45″	47.5″	50″	52.5″	55″
Bottom Circle **(C)** (Extended)	36″	39″	42″	45″	47.5″	50″	52.5″	55″
Body Length **(D)** (center back seam)	26.5″	27.125″	27.75″	28.5″	29.25″	30″	30.75″	31.5″
Sleeve Length **(E)** (center back to SL edge)	18.5″	19″	19.5″	20″	20.5″	21″	21.5″	22″

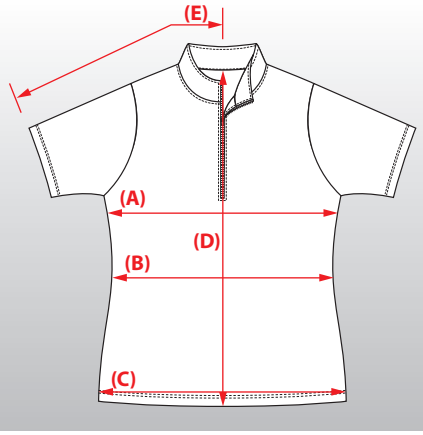

STYLE ST168

SIZE SPECIFICATIONS	XS	S	M	L	XL	2XL	3XL	4XL
Chest Circle **(A)** (1″ below armhole)	31″	33.5″	36″	38.5″	41″	43.5″	46″	48.5″
Waist Circle **(B)**	28.5″	31″	33.5″	36″	38.5″	41″	43.5″	46″
Bottom Circle **(C)** (Extended)	33″	35.5″	38″	40.5″	43″	45.5″	48″	50.5″
Body Length **(D)** (center back seam)	23.875″	24.5″	25.25″	26″	26.75″	27.5″	28.25″	29″
Sleeve Length **(E)** (center back to SL edge)	14.25″	14.75″	15.25″	15.75″	16.25″	16.75″	17.25″	17.75″

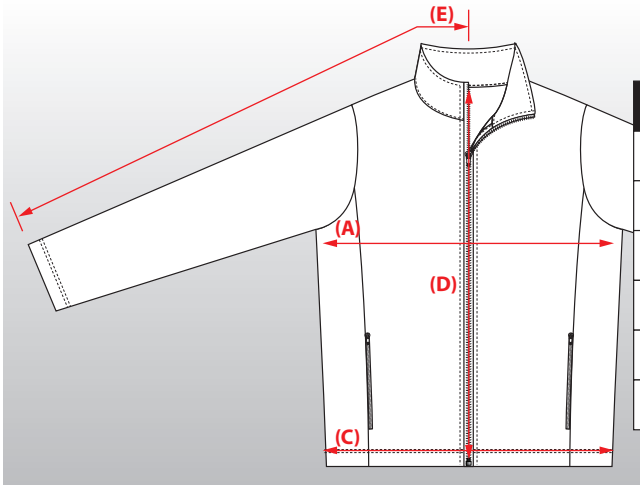

STYLE JK578

SIZE SPECIFICATIONS	XS	S	M	L	XL	2XL	3XL	4XL
Chest Circle **(A)** (1″ below armhole)	38″	41″	44″	47″	50″	53″	56″	59″
Bottom Circle **(C)** (Extended)	36″	39″	42″	45″	48″	51″	54″	57″
Body Length **(D)** (center back seam)	26.5″	27.5″	27.5″	28.5″	28.5″	29.5″	29.5″	30.5″
Sleeve Length **(E)** (center back to SL edge)	33.625″	34.25″	34.875″	35.5″	36.25″	37″	37.75″	38.5″

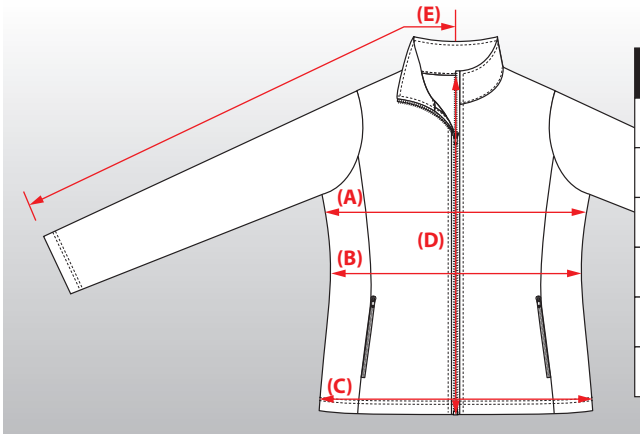

STYLE JK579

SIZE SPECIFICATIONS	XS	S	M	L	XL	2XL	3XL	4XL
Chest Circle **(A)** (1″ below armhole)	33.5″	36.5″	39.5″	42.5″	45.5″	48.5″	51.5″	54.5″
Waist Circle **(B)**	31″	34″	37″	40″	43″	46″	49″	52″
Bottom Circle **(C)** (Extended)	35.5″	38.5″	41.5″	44.5″	47.5″	50.5″	53.5″	56.5″
Body Length **(D)** (center back seam)	25″	26″	26″	27″	27″	28″	28″	29″
Sleeve Length **(E)** (center back to SL edge)	31.75″	32.5″	33.25″	34″	34.75″	35.5″	36.25″	37″